Specification sheet
ICE 900 STAGE V / TIER 4F
Hydraulic Power Pack

English

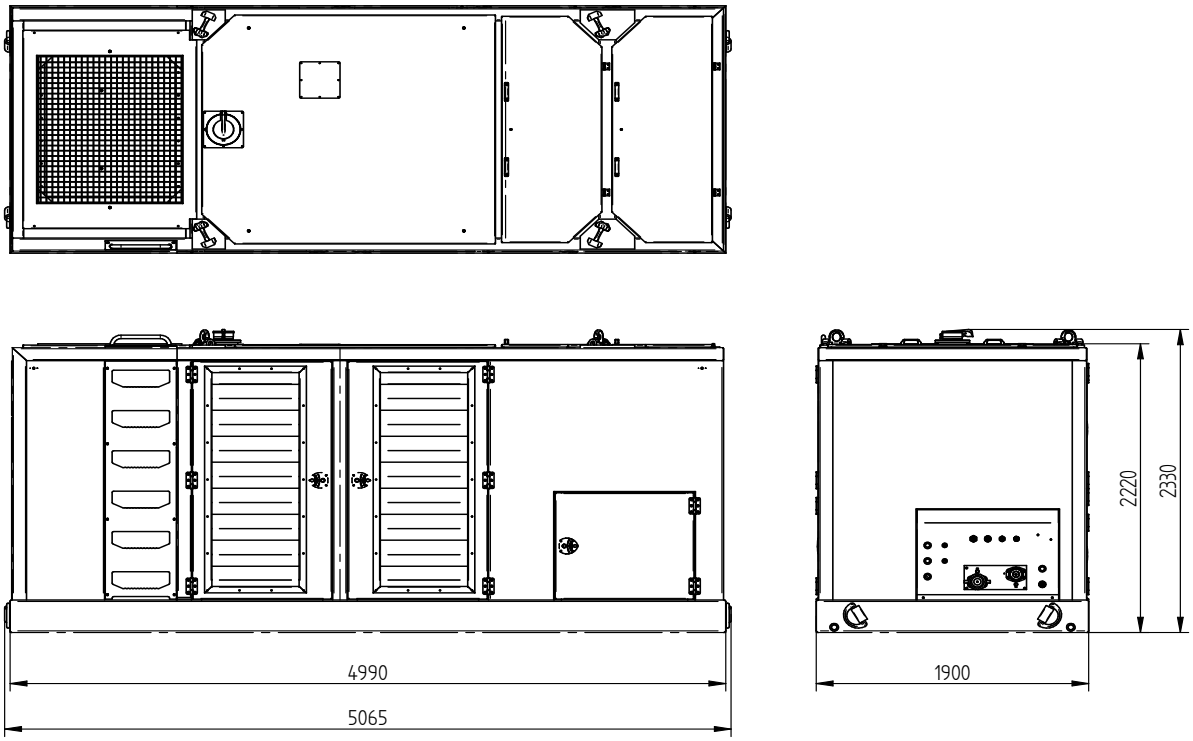

Specifications :	ICE 900 STAGE V / TIER 4F	
Diesel Engine	Volvo TWD 1683 VE	
Max. theoretical power	585/796	kW/HP
Max. frequency	1900	rpm
Max. operating pressure	350	bar
Hydraulic pump	Parker	
Max. oil flow	972	L/min
Diesel oil	1045	L
DEF (AdBlue) capacity	70	L
Hydraulic oil	2200	L
Weight without fuel	9500	kg
Weight filled up	10400	kg

Dieseko group B.V. All rights reserved. No part of this publication may be reproduced and/or published in any manner whatsoever without prior written permission from Dieseko group B.V.

Technische Daten
ICE 900 STAGE V / TIER 4F
Aggregat

Deutsch

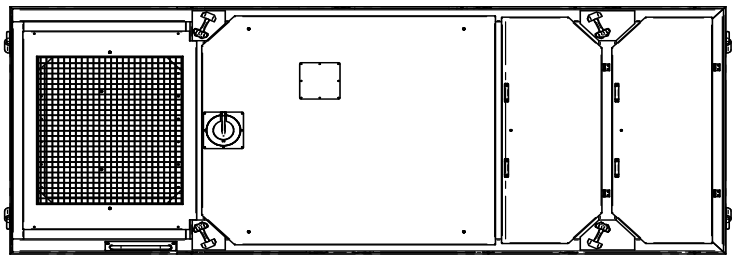

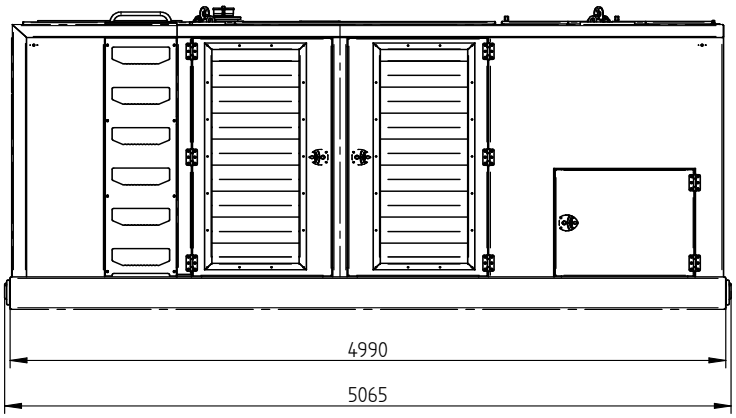

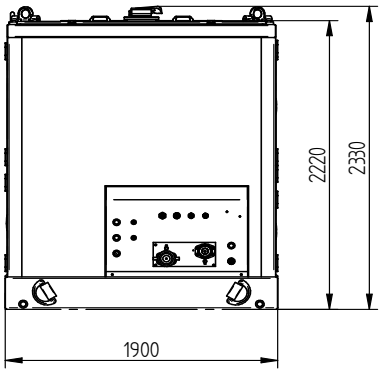

Technische Daten :	ICE 900 STAGE V / TIER 4F	
Dieselmotor	Volvo TWD 1683 VE	
Max. theoretische Leistung	585/796	kW/HP
Max. Drehzahl	1900	rpm
Max. Betriebsdruck	350	bar
Hydraulische Pumpe	Parker	
Max. Fördermenge	972	L/min
Diesel Öl	1045	L
DAF (AdBlue) kapazität	70	L
Hydraulische Öl	2200	L
Gewicht ohne Diesel Öl	9500	kg
Gewicht	10400	kg

Dieseko group B.V. All rights reserved. No part of this publication may be reproduced and/or published in any manner whatsoever without prior written permission from Dieseko group B.V.

Spécifications
ICE 900 STAGE V / TIER 4F
Groupe hydraulique

Français

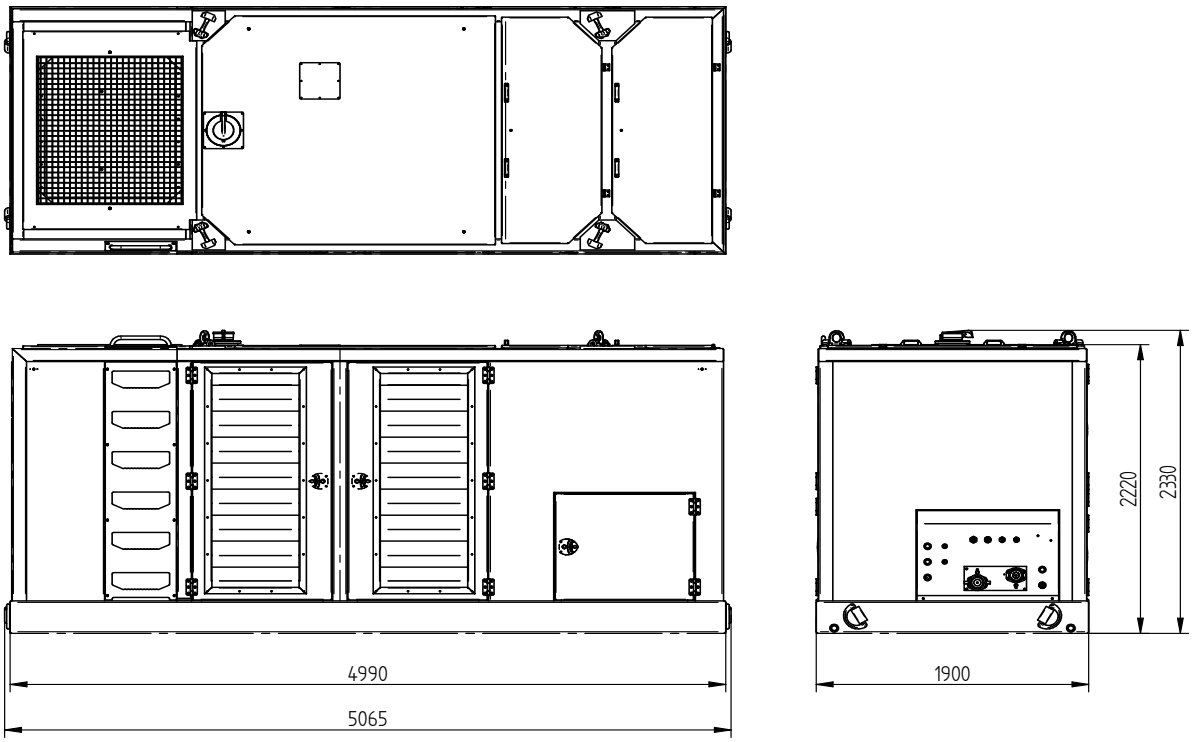

Spécifications	ICE 900 STAGE V / TIER 4F	
Moteur Diesel	Volvo TWD 1683 VE	
Puissanse théorique max.	585/796	kW/HP
Max. fréquence	1900	rpm
Pression de travail max.	350	bar
Pompe hydraulique	Parker	
Débit d'huile max.	972	L/min
Huile diesel	1045	L
Capacité FED (AdBlue)	70	L
Huile hydraulique	2200	L
Poids sans huile diesel	9500	kg
Poids	10400	kg

Dieseko group B.V. All rights reserved. No part of this publication may be reproduced and/or published in any manner whatsoever without prior written permission from Dieseko group B.V.

Specificaties
ICE 900 STAGE V / TIER 4F
Hydraulisch aggregaat

Nederlands

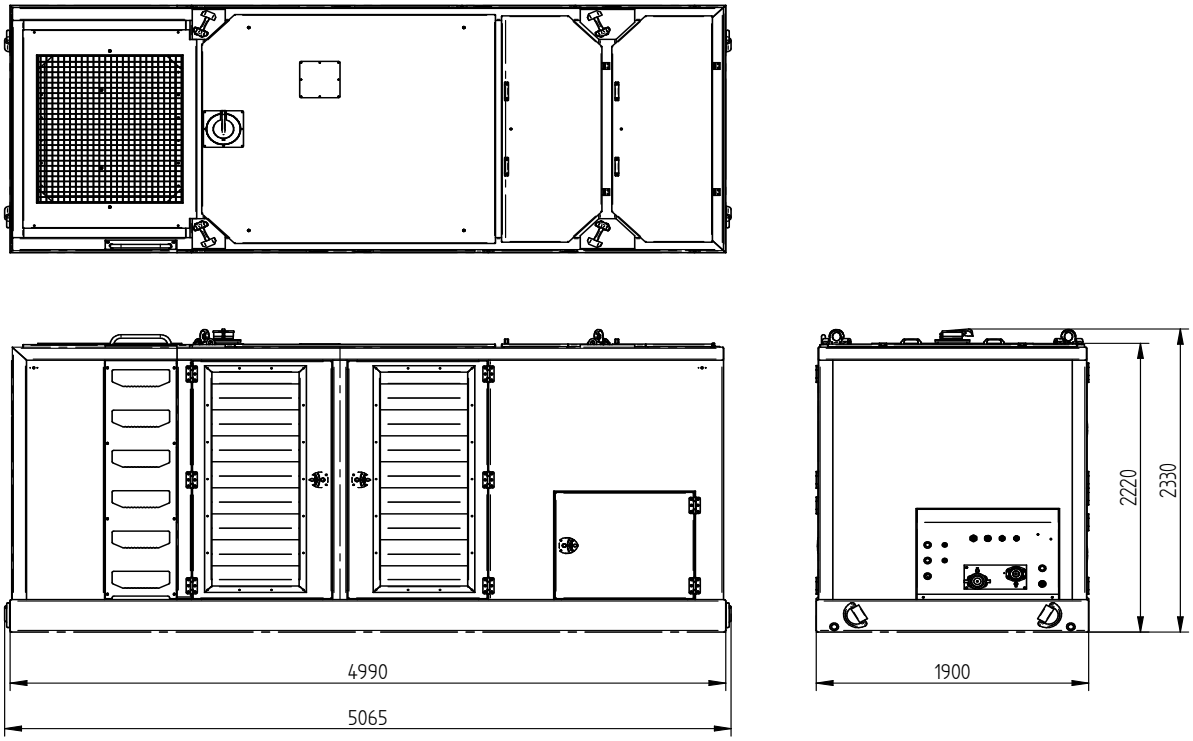

Specificaties	ICE 900 STAGE V / TIER 4F	
Dieselmotor	Volvo TWD 1683 VE	
Max. theoretisch vermogen	585/796	kW/HP
Max. toerental	1900	rpm
Max. werkdruk	350	bar
Hydraulische pomp	Parker	
Max. olie doorstroming	972	L/min
Diesel olie	1045	L
DEF (AdBlue) capaciteit	70	L
Hydraulische olie	2200	L
Gewicht zonder diesel	9500	kg
Gewicht	10400	kg

Dieseko group B.V. All rights reserved. No part of this publication may be reproduced and/or published in any manner whatsoever without prior written permission from Dieseko group B.V.

Especificaciones
ICE 900 STAGE V / TIER 4F
Unidat de potencia

Español

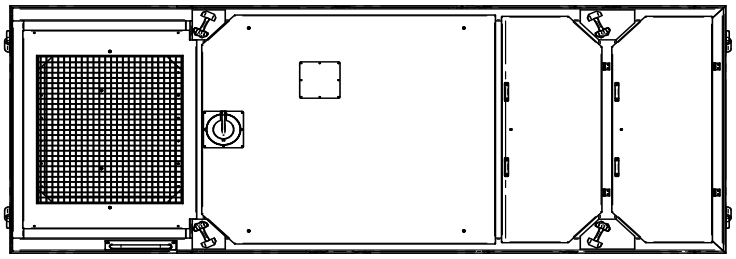

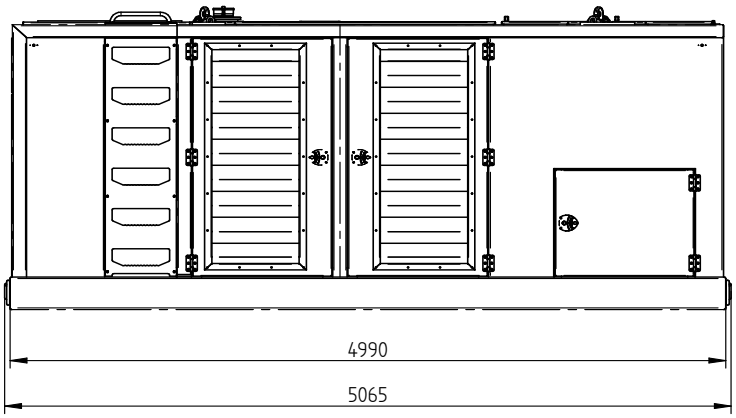

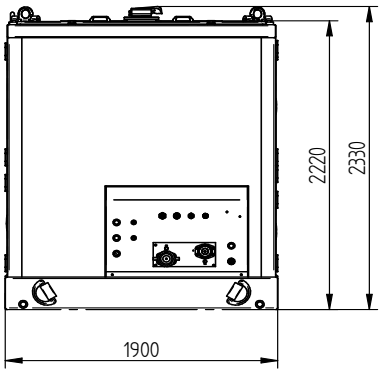

Especificaciones	ICE 900 STAGE V / TIER 4F	
Motor de diesel	Volvo TWD 1683 VE	
Potencia Máxima teórica	585/796	kW/HP
Frecuencia máxima	1900	rpm
Presión máxima de trabajo	350	bar
Bomba hydráulica	Parker	
Flujo de aceite máximo	972	L/min
Gasóleo	1045	L
Capacidad DEF (AdBlue)	70	L
El aceite hidráulico	2200	L
Peso sin gasóleo	9500	kg
Peso	10400	kg

Dieseko group B.V. All rights reserved. No part of this publication may be reproduced and/or published in any manner whatsoever without prior written permission from Dieseko group B.V.

Specifications

ICE 900 STAGE V / TIER 4F

Hydraulic Power Pack

USA

Dimensions in inches

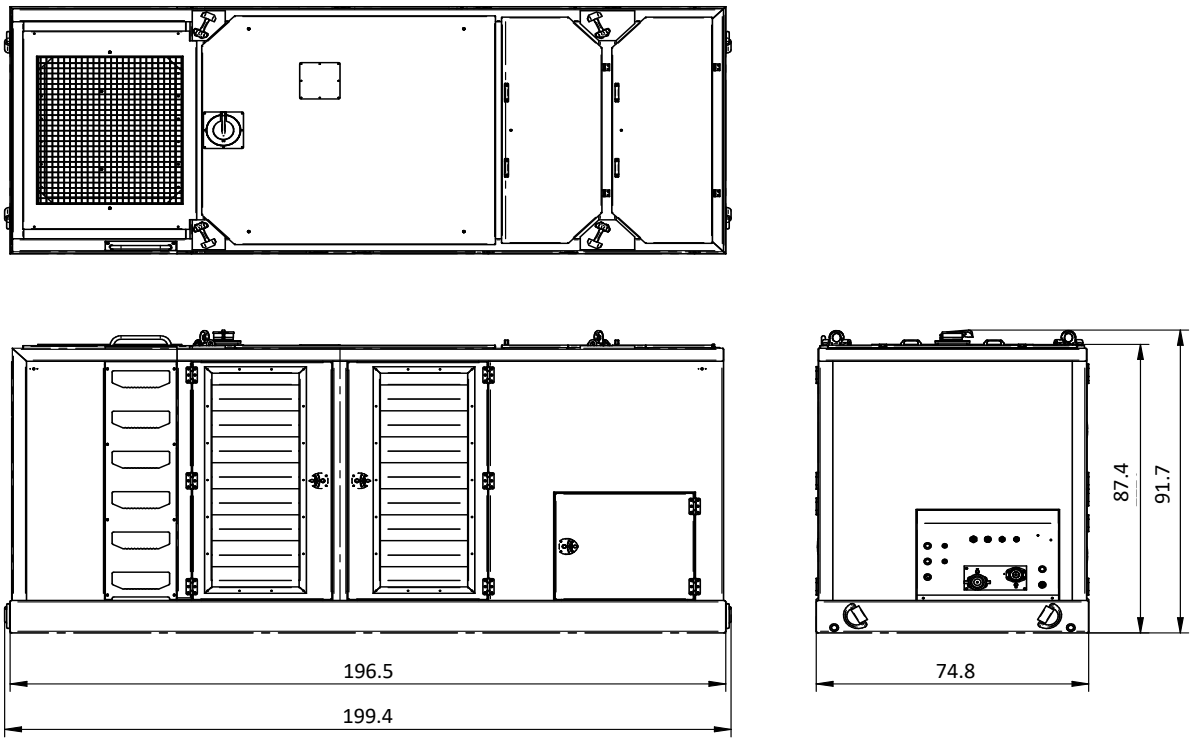

Specifications	ICE 900 STAGE V / TIER 4F	
Diesel Engine	Volvo TWD 1683 VE	
Max. theoretical power	585/796	kW/HP
Max. frequency	1,900	rpm
Max. operating pressure	5,076	psi
Hydraulic pump	Parker	
Max. oil flow	257	gal/min
Diesel Fuel	276	gal
DEF (AdBlue) capacity	18	gal
Hydraulic oil	581	gal
Weight without fuel	20,944	lbs
Weight with fuel	22,928	lbs

Dieseko group B.V. All rights reserved. No part of this publication may be reproduced and/or published in any manner whatsoever without prior written permission from Dieseko group B.V.

Specificatii
ICE 900 STAGE V / TIER 4F
unitate de putere hidraulica

românesc

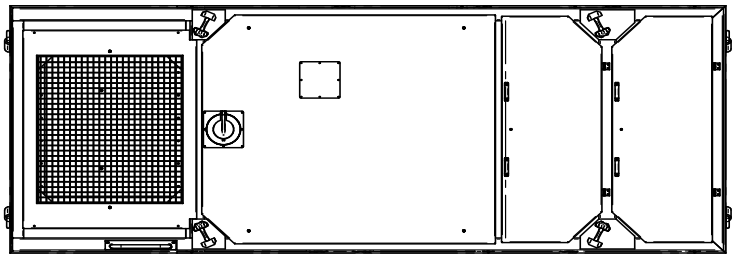

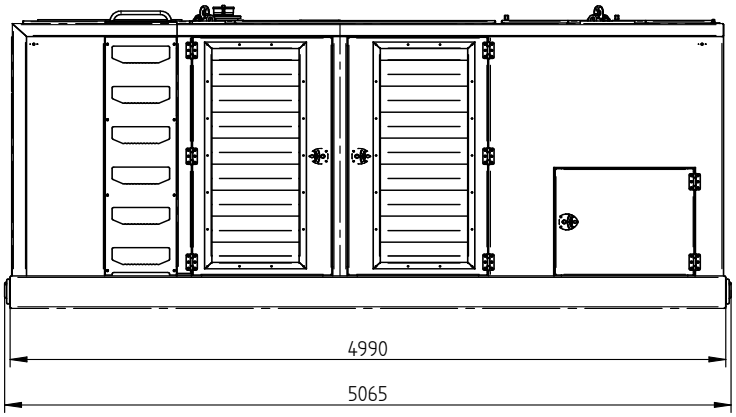

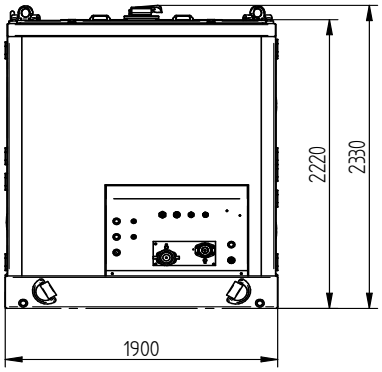

Specificatii :	ICE 900 STAGE V / TIER 4F	
Motor diesel	Volvo TWD 1683 VE	
Puterea maxima teoretica	585/796	kW/HP
Frecventa maxima	1900	rpm
Presiune maxima de lucru	350	bar
Pompa hidraulica	Parker	
Debit maxim de ulei	972	L/min
motorină	1045	L
Capacitate rezervor aditiv AdBlue	70	L
Ulei hidraulic	2200	L
Greutatea fara combustibil	9500	kg
Greutatea cu combustibil	10400	kg

Dieseko group B.V. All rights reserved. No part of this publication may be reproduced and/or published in any manner whatsoever without prior written permission from Dieseko group B.V.